THESIS FOR THE DEGREE OF LICENTIATE OF ENGINEERING IN THERMO AND FLUID DYNAMICS

# Methanol Diesel Dual Fuel Direct Injection in a HD-CI Engine

MICHAEL SACCULLO

Department of Mechanics and Maritime Sciences
CHALMERS UNIVERSITY OF TECHNOLOGY

Göteborg, Sweden 2018

Methanol Diesel Dual Fuel Direct Injection in a HD-CI Engine
MICHAEL SACCULLO

© MICHAEL SACCULLO, 2018

Thesis for the degree of Licentiate of Engineering 2018:05
ISSN 1652-8565
Department of Mechanics and Maritime Sciences
Chalmers University of Technology
SE-412 96 Göteborg
Sweden
Telephone: +46 (0)31-772 1000

Chalmers Reproservice
Göteborg, Sweden 2018

Methanol Diesel Dual Fuel Direct Injection in a HD-CI Engine
Thesis for the degree of Licentiate of Engineering in Thermo and Fluid Dynamics
MICHAEL SACCULLO
Department of Mechanics and Maritime Sciences
Chalmers University of Technology

# Abstract

Laws concerning emissions from heavy duty (HD) internal combustion engines are becoming increasingly stringent. New engine technologies are needed to satisfy these new requirements and to reduce fossil fuel dependency. One way to achieve both objectives can be to partially replace fossil fuels with alternatives that are sustainable with respect to emissions of greenhouse gases, particulates and nitrous oxides (NOx). Suitable candidates are ethanol or methanol.
The aim of the studies presented here was to investigate the possible advantages of combusting alcohol fuels in dual fuel configuration in a HD Diesel engine - in particular, the potential to greatly reduce particulate emissions and thereby bypass the soot-NOx tradeoff.
To better understand the fuel-air mixing process in alcohol fuel sprays, ethanol sprays were studied in a high pressure/temperature spray chamber with optical access. The experiments were performed at a gas density of about 27 $kg/m^3$ at around 550 °C and around 60 bar, representing typical operating conditions for a HD engine at low loads. High speed video images of the developing sprays were recorded, enabling measurement of spray parameters such as the liquid cone angle, liquid penetration length and vapor penetration at injection pressures between 500 and 2200 bar. Having characterized the behavior of alcohol sprays, a second study was conducted to investigate the combustion of alcohol fuels in a single cylinder engine (SCE). Because of methanol's poor auto-ignition properties, a pilot Diesel injection was used to initiate the combustion process. The two fuels were injected directly but separately, necessitating the use of two separate standard common rail Diesel injection systems together with a newly designed cylinder head and adapted injection nozzles. The studies serve as a proof-of-concept also showing that methanol and ethanol can successfully be used in a high pressure Diesel injection system. The dual fuel system's combustion properties were compared to those of pure Diesel with the same dual injection strategy. Methanol offered comparable combustion efficiencies to conventional Diesel with lower emissions of NOx and significantly lower soot emissions. A design of experiments study was performed to characterize the methanol-diesel system's behavior in detail at a single speed-load point, while maintaining very low soot emissions and low emissions of NOx at comparable high indicated gross efficiency.

Keywords: Dual fuel, Ethanol, Methanol, heavy duty engine, fuel spray

# List of publications

This thesis is based on the work contained in the following publications:

**Publication A** M. Saccullo, M. Andersson, J. Eismark, I. Denbratt, "High Pressure Ethanol Injection under Diesel-like Conditions" in *SAE WCX Detroit 2017*.

**Publication B** M. Saccullo, T. Benham, I. Denbratt, "Dual Fuel Methanol and Diesel Direct Injection HD Single Cylinder Engine Tests" in *SAE WCX Detroit 2018*.

# Acknowledgements

First and foremost I want to thank my main supervisor, Ingemar Denbratt, and my co-supervisor, Anders Karlsson, for giving me the opportunity to work on this PhD project.

I must also thank my colleagues who have worked on the project, including Jan Eismark, Johan Engström, Ingemar Magnusson, and Niclas Wenneberg among others from Volvo GTT. I am deeply indebted to you for all your support, especially on technical issues, and for many fruitful discussions.

Special thanks also go to my two colleagues Andreas and Vignesh, with whom I have the honour of sharing an office and who quickly became my friends, but also all my other colleagues and friends at Chalmers.

Further I want to thank my family and friends at home for their support.

Funding from the Swedish Energy Agency is gratefully acknowledged.

# Contents

**Abstract** **i**

**List of publications** **iii**

**Acknowledgements** **v**

**1 Introduction** **1**

**2 Background** **3**
2.1 The soot-NOx trade-off . . . . . 4
2.2 Ongoing research and combustion regimes . . . . . 4
2.3 Direct Dual Fuel Combustion . . . . . 5
2.4 Fuel sprays . . . . . 5
2.5 Objective . . . . . 6

**3 Experimental Setup** **7**
3.1 Fuels and Fueling system . . . . . 7
3.2 Spray Chamber Experiments . . . . . 7
3.2.1 Optical setup . . . . . 8
3.2.2 Measurements and spray evaluation . . . . . 9
3.3 Engine Experiments . . . . . 10
3.3.1 Data acquisition and handling . . . . . 12
3.3.2 Methods . . . . . 14

**4 Contribution** **15**
4.1 Paper I . . . . . 15
4.2 Paper II . . . . . 15

**5 Outlook** **17**

**References** **19**

# 1 Introduction

Historically the transportation of people and goods was always driven by innovation. From the invention of the wheel over the steam engine towards the internal combustion engine (ICE) and its electric counterpart or complement, the improvement of already existing or development of new technologies were central for the development of the society as such [1]. Since the industrial revolution and the invention of the steam engine, the combustion of fossil fuels increased and caused plenty of challenges. Nowadays more products, goods and people are transported globally than ever before and not only due to an increased global population. The urbanization process, global markets and changes in supply chains within industry are shaping the transportation sector of today. Additionally changes in customer behaviour, especially online-shopping are driving forces for increased demand in the transportation sector. An investigation ordered by the European Commission shows an increase of road freight traffic by 57 % until 2050 compared with 2010 [2] as shown in figure 1. Without change in the transport sector, this will result in higher greenhouse

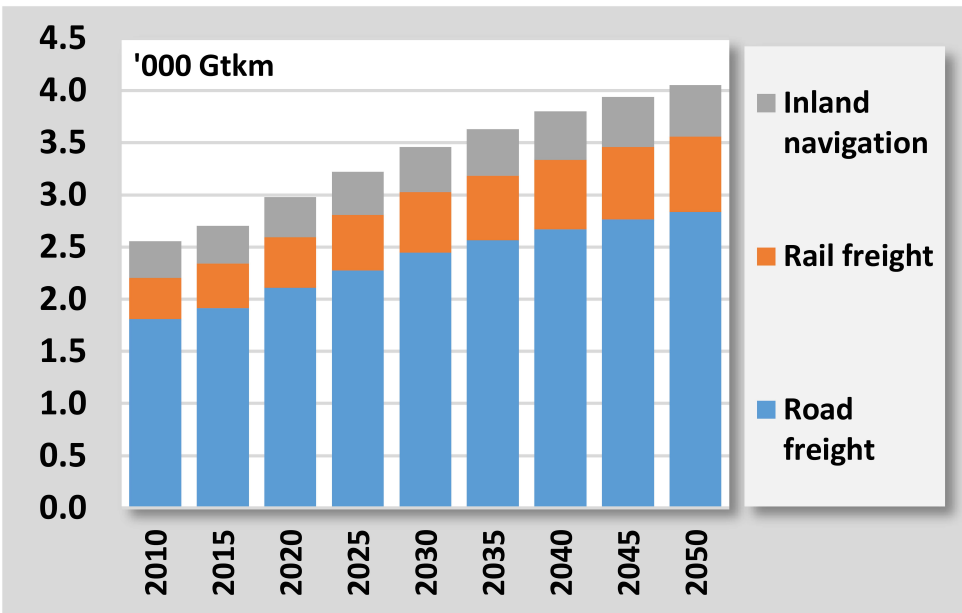


Figure 1: *Future trends in freight transportation as predicted by the EU by mode [2]*

gas (GHG) emissions and increased emissions of local pollutants such as particulates, NOx, and unburned hydrocarbons (UHC) because most goods in Europe are transported using trucks and lorries powered by a Diesel ICE. Increased emissions of particulates and NOx increase the risk of severe health-related issues, especially those affecting the cardiovascular system, as noted by the Health Effects Institute in a special report on Diesel emissions [3]. Additionally, there is an almost undisputed global consensus that

fossil fuel consumption must be reduced to control GHG emissions and thereby counter the challenges of global warming [4]. There is no avoiding the fact that all emissions from ICEs must be reduced significantly to meet these challenges, and it is almost certain that more stringent emissions regulations will be introduced in the near future to improve urban air quality and reduce GHG emissions arising from fossil fuel combustion. Some such regulations have already been introduced, as exemplified by the European emissions standards for combustion engines and the local bans on Diesel engines without particulate filters in some German cities [5, 6]. In 2016, the European Commission summarized its goals regarding emissions from the transportation sector as follows:

*"by midcentury, greenhouse gas emissions from transport will need to be at least 60 % lower than in 1990 and be firmly on the path towards zero. Emissions of air pollutants from transport that harm our health need to be drastically reduced without delay."* [7]

Consequently, there is an urgent need to implement new engine technologies that will reduce the impact of these harmful substances and allow vehicle manufacturers to comply with future regulations. Similar legislative interventions designed to spur the uptake of environment-protecting technologies and curb emissions of pollutants have already been successfully implemented, as demonstrated by the ban on CFC production and use to halt the growth of the hole in the ozone layer, the introduction of exhaust gas filter systems to prevent acid rain by trapping sulphur dioxide emissions from coal- and lignite-fueled power plants, and the ban on leaded gasoline additives [8, 9].

One possible way of reducing emissions from HD ICEs is to operate them using alcohol-based alternative fuels that can be produced from renewable sources. Experiments with alcoholic fuels such as methanol and ethanol have yielded high combustion efficiencies and promisingly low engine out soot emissions.

# 2 Background

To achieve the goals of reducing GHG and local emissions from HD ICE, it will be necessary to develop affordable emissions-reducing technologies that will be taken up quickly in the market. The fuel efficiency and engine out emissions profiles of HD Diesel engines have improved greatly in recent years, and exhaust gas aftertreatment systems have been introduced to reduce tailpipe emissions (at the cost of slightly reducing gains in engine efficiency and performance). However, given the expected growth in the transportation sector and the need to reduce emissions further, greater efforts will be required. This chapter presents the basic issues that give rise to problematic emissions from HD Diesel engines, outlines recent progress in the development of new combustion regimes and alternative fuels, and finally presents the objectives of the new work presented in this thesis.

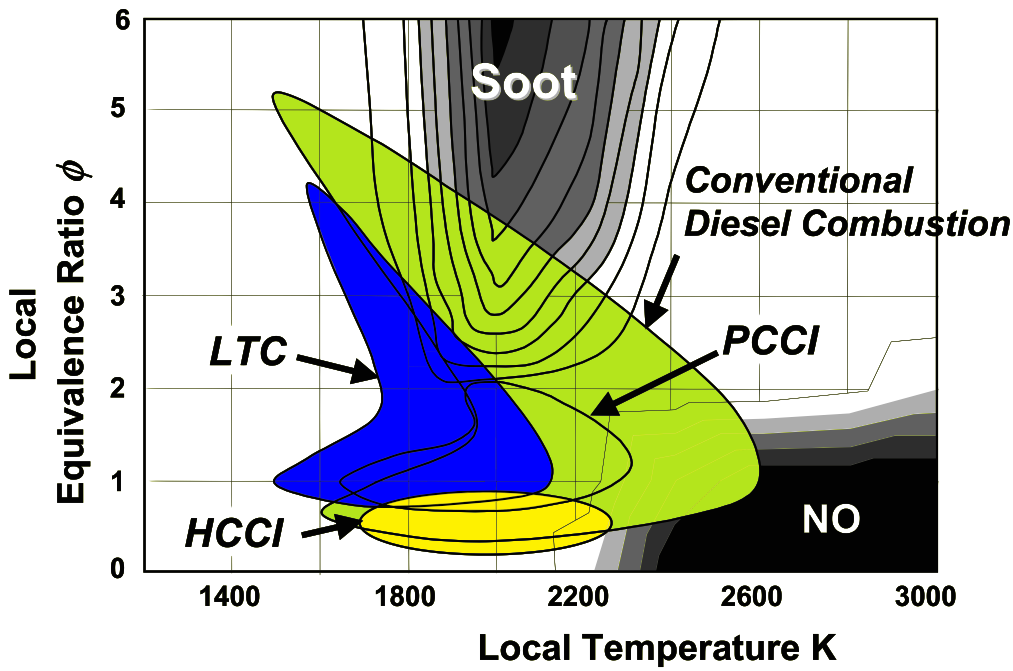


Figure 2: *Soot-NOx trade-off for different Diesel combustion regimes adapted from Akihama [10]*

## 2.1 The soot-NOx trade-off

The basic operating principles of Diesel engines and the process of Diesel fuel combustion are well understood after many years of research, and are described in detail in texts such as Heywood's "Internal Combustion Engine Fundamentals" [11]. This section briefly reviews some of these principles that must be understood in order to understand the techniques that are being developed to address the problems of current Diesel engines. Figure 2 shows the correlation between the two main local emissions from a conventional Diesel engine, soot and NOx. It also shows how they respond to changes in the local equivalence ratio ($\phi$), local combustion temperature, and residence time. The figure illustrates the so-called soot-NOx trade-off, which exists because soot particles are mainly generated in fuel-rich zones at temperatures between 1800 K and 2400 K when the local $\phi$ is greater than 2. Better fuel mixing and reductions in $\phi$ that make the combustion process leaner tend to significantly increase the temperature of combustion. This reduces soot formation but promotes the main mechanism of thermal NOx formation, i.e. the Zeldovich mechanism, which requires combustion temperatures above 2000 K and a nitrogen-rich environment [12]. The key steps in this mechanism are:

$$O + N_2 \rightleftharpoons NO + N \tag{1}$$

$$N + O_2 \rightleftharpoons NO + O \tag{2}$$

The green area in Figure 2 corresponds to the operating conditions for conventional Diesel combustion. Within this region, soot and NOx formation can be tuned by adjusting various engine operating parameters such as the injector nozzle configuration, the injection timing and injection pressure or the level of exhaust gas recirculation (EGR), which reduces in-cylinder temperatures and oxygen levels and thus reduces NOx formation but promotes soot formation.

## 2.2 Ongoing research and combustion regimes

Much research in recent years has focused on the development of low temperature combustion (LTC) concepts that simultaneously reduce soot and NOx formation [13–15]. The region colored in blue in Figure 2 corresponds to LTC operating conditions. In LTC, large amounts of EGR are used to cool the combustion process, leading to increased UHC emissions. This is a major disadvantage, especially because it also tends to increase carbon monoxide (CO) emissions at higher loads. This problem can be alleviated to some extent by using alternative fuels that produce lower GHG and soot or NOx emissions [16].

Because of the limited scope for reducing the emissions of HD engines burning fossil Diesel, there is considerable interest in biofuels and other sustainable alternative fuels [17] such as Diesel surrogates produced in reactors powered by electricity from renewable sources such as wind or solar power [ref.]. All of these fuels seem to be suitable alternatives to fossil Diesel. A lot of research has focused on alcohol-based fuels with low cetane numbers [18, 19].

Unfortunately, the low cetane numbers of alcohols give rise to long ignition delays, and they have poor autoigniteability when used as Diesel substitutes under conventional Diesel engine operating conditions [20]. This has prompted the development of dual fuel strategies that use a port fuel injection system for the low cetane fuel together with a direct Diesel injection system to facilitate ignition. These strategies are compatible with many different combustion modes and can reduce soot emissions and fossil Diesel consumption. A recent review on the use of alcohol fuels in Diesel engines by Vallinayagam et al. showed that interest in such systems has increased dramatically [21].

The yellow-colored region in Figure 2 corresponds to the operating conditions for another widely studied combustion strategy involving port injection of low cetane fuels - homogeneous charge compression ignition (HCCI). HCCI can simultaneously reduce soot and NOx engine out emissions but achieves comparatively low efficiency and responsiveness to load changes [22]. A particularly promising variant of HCCI is reactivity controlled compression ignition (RCCI). Reitz and Duraisamy identified the key advantages of this technology as the ability to comply with soot and NOx emissions standards without an additional aftertreatment system, high thermal efficiencies over wide load ranges, and greater thermal efficiency than conventional HD Diesel engines. The latter advantage largely stems from a reduction of heat transfer losses. The authors also identified aspects of RCCI requiring further development, such as the need for greater cycle-to-cycle control over the complete load range and the need to adapt aftertreatment systems to cope with relatively low exhaust gas temperatures [23].

## 2.3 Direct Dual Fuel Combustion

One way to increase the controllability and responsiveness of dual fuel engines is to directly inject the low- and high cetane fuels into the cylinder. Comparatively few studies have examined this strategy, but an early investigation by Ullman and Hare using a HD engine with methanol and Diesel yielded promising results [24–26]. This approach offers many potential advantages above and beyond low engine out soot and NOx emissions, including greater fuel efficiency and improved engine flexibility [11]. Wissink et al. recently reported a new variant of this strategy using Diesel and gasoline as the high and low cetane fuels, respectively, in an engine using the direct dual fuel stratification (DDFS) combustion concept [27, 28], which was described as a combination of RCCI and partially premixed combustion (PPC) that combines the advantages of both strategies.

## 2.4 Fuel sprays

Detailed characterizations of high pressure alcohol fuel sprays in Diesel-like environments are needed to guide the further development of dual-fuel direct injection combustion concepts. Such characterizations will facilitate the design of optimized nozzle configurations and will also provide important insights into factors affecting the efficiency of combustion and engine emissions profiles. The high-speed injection of a fuel jet into the cylinder creates turbulence that promotes spray breakup and vaporization, leading to

fuel/air mixing. The local equivalence ratio plays a major role in soot formation, while the efficiency of the mixing process strongly affects the scope for achieving complete combustion and is highly sensitive to the nature of the fuel injection process [29]. The orifice diameter of the injector, the temperature, and the ambient gas density are the main factors governing spray behavior. Other important factors are properties of the fuel itself such as its heat of evaporation, boiling point, and volatility [30, 31].
One particularly interesting spray property in engine tests is the liquid length, which determines the extent of wetting of the cylinder liner in real engines. It has been suggested that the liquid length is only weakly dependent on the injection pressure.

## 2.5 Objective

This thesis explores a new dual fuel combustion system that combines an injection technique similar to that used in DDFS with a combustion strategy resembling that used in conventional Diesel engines. The main objective of the work presented here is to use dual fuel direct injection strategies to combine the established advantages of Diesel engines, such as high fuel efficiency [11], with those of alcohol fuels, such as low particulate and GHG emissions. The initial primary objectives were to establish a proof of concept and validate the use of existing diesel injection systems for high pressure alcohol injection. An additional early goal was to characterize the liquid penetration length, liquid cone angle, and vapor phase distribution of direct injected alcohol sprays to determine the similarities and differences between alcohol and Diesel sprays under conditions resembling those occurring in Diesel engines. The results of the initial spray experiments were used to guide the design of engine experiments, which were performed on a HD engine using methanol with a pilot Diesel injection to facilitate ignition. The objective during the engine tests was to establish stable running conditions and to determine the values of important combustion parameters, engine-out emissions levels, and fuel efficiencies at different speed-load points. The results obtained in these experiments were compared to reference data obtained by burning pure Diesel fuel in the same engine. In future, the results obtained will also be used to guide and validate computational fluid dynamics (CFD) simulations. For the sake of convenience and to facilitate comparisons to existing engines, the experimental engine used components from production engines wherever possible.

# 3 Experimental Setup

This chapter presents an overview of the experimental setup, the equipment used, and the procedures used to obtain measurements. It also describes how the data were analyzed and post-processed. Two experimental campaigns were conducted. In the first, a high-pressure/high-temperature (HP/HT) spray chamber was used to characterize the properties and behavior of high pressure ethanol sprays. In the second, the dual fuel injection strategy was studied at various speed-load points by performing SCE experiments using a Volvo D13 HD engine.

## 3.1 Fuels and Fueling system

The main fuelling system in both experimental campaigns was a standard Delphi HD common rail fuel injection system used with pure ethanol (E100) and pure methanol (M100). The system consists of an externally driven high pressure pump delivering a maximum pressure of 2200 bar, high pressure pipes, a HD rail for 6 cylinder truck applications, an F3 or F2 injector, and an engine control unit (ECU) modified for single cylinder applications. The internal and external rubber seals were replaced to minimize the risk of failure due to the use of alternative fuels. To avoid cavitation bubbles in the return line, which can cause errors when measuring fuel consumption, the system's backpressure was increased to 5 bar. For the engine tests, an additional medium duty (MD) Bosch common rail fuel injection system was installed to deliver the pilot Diesel injections. This system was used exclusively with Diesel fuel; its mode of operation was identical to that of the Delphi system, and its ECU was modified for single cylinder operation. Table 1 and Table 3 present details of all the fuels and injector configurations, respectively, that have been used in the project to date.

Table 1: Fuels and fuel properties used

| **Fuel** | **Unit** | **Diesel** | **Ethanol** | **Methanol** |
|---|---|---|---|---|
| Formula | | $C_xH_y$ | $C_2H_5OH$ | $CH_3OH$ |
| Cetane number | | 52 | 5 - 8 | <5 |
| Lower heating Value | MJ/kg | 42.9 | 26.8 | 20.09 |
| Heat of Vaporization | kJ/kg*K | 254 | 846 | 1109 |
| Density | $kg/m^3$ | 842 | 793.6 | 792 |

## 3.2 Spray Chamber Experiments

The HP/HT constant flow spray chamber has an internal volume of 2 l. Its configuration for the spray experiments is depicted in Figure 3. Optical access is available through windows on four sides of the chamber; the windows are around 100 mm long and 50 mm wide. The maximum chamber pressure is 100 bar at temperatures of up to 900 K. These conditions resemble the operating conditions of a HD Diesel engine at low loads [32].

Compressed air is delivered by a 4-stage piston compressor and then heated by surface heaters before entering the vessel. The air that flows from the top of the chamber to the bottom has a speed of approximately 0.1 m/s, which is negligible when compared to the fuel injection velocities of around 200 m/s.

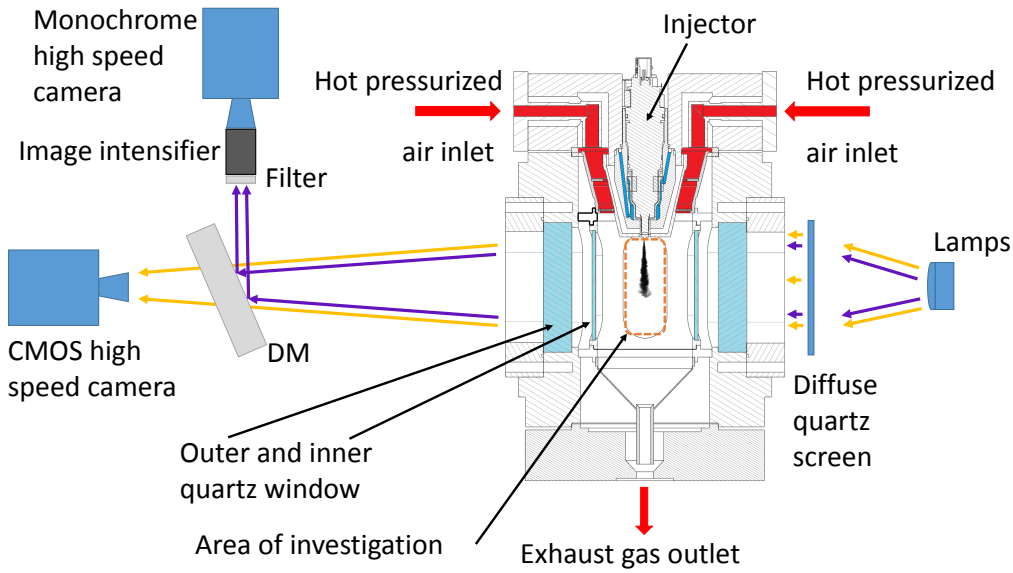


Figure 3: *Schematic of the spray chamber and optical set-up. Lamps: Two halogen spot lights, one UV lamp at 254 nm. DM: dichroic mirror (248 nm +-25 nm). Filter 254 nm. [33]*

### 3.2.1 Optical setup

The sprays were illuminated by two halogen spot lights and one UV lamp with a wavelength of 254 nm, as shown in Figure 3. A diffuse quartz screen ensured an even distribution of light intensity. The dichroic mirror on the opposite site of the vessel permitted only the passage of light with wavelengths of 248 nm ± 25 nm, ensuring that the information in the UV light beam was separated from the shadowgraph image containing the information in the visible light beam. Visible light shadowgraph images were recorded using a high speed CMOS camera with normal optical lenses, and provided information on the distribution of the spray's liquid phase. The UV light beam, which provided information on the distribution of the liquid and gaseous phases, was passed through a 254 nm filter to exclude ambient light and other non-informative light sources, before entering an image intensifier. A phosphor screen was installed at the far end of the intensifier, allowing a shadowgraph image to be captured using a monochrome camera. At the desired frame rate of 20 kHz, the resolutions of the CMOS and monochrome cameras were set to 256x512 and 480x200 pixels, respectively. The cameras were activated indirectly by the injection pulse and had an exposure time of 10 $\mu$s. An additional laser was used to ignite a pilot ethanol spray, which in turn was used to ignite the main ethanol spray. This system was used to simulate Diesel ignition in the real engine and to determine whether increasing

the dwell time adversely affected the ignition of the main injection. The ignition of the pilot ethanol spray with the laser beam is depicted in Figure 4.

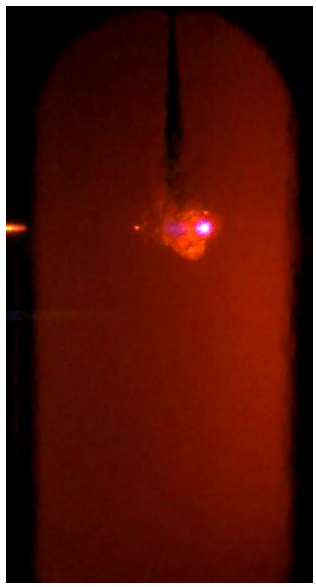

Figure 4: *Laser ignition test with pure ethanol*

### 3.2.2 Measurements and spray evaluation

Ten replicate injections were recorded at each measurement point, with the same injection duration, pressure, and ambient conditions inside the vessel in all replicates. The measurement points examined in the spray experiments are presented in Table 2. High speed video recordings were acquired using the monochrome and CMOS cameras along with traces of the injection pulse, the rail pressure, the chamber pressure, and the temperature.

Table 2: Experimental conditions in the spray chamber tests

| **Experimental conditions** | **Ambient temperature** [°C] | **Ambient pressure** [bar] | **Ambient gas density** [kg/$m^3$] |
|---|---|---|---|
| Evaporating ethanol spray | 550 | 60 | 25.4 |
| Evaporating Diesel spray | 425 | 54 | 27 |
| Evaporating ethanol spray | 425 | 54 | 27 |

During post-processing, the light intensity thresholds used to extract information from the high speed video images were chosen based on the results reported by Du [34]. These thresholds were adjusted to include diluted droplet clouds, and the spray was assumed to be liquid in regions where the relative light intensity exceeded 0.1 (25/255). This value yielded consistent results for all of the tested fuels. The cone angle and the liquid

and vapor penetration lengths were determined for each individual frame in each video recording, allowing the evolution of the spray over time to be characterized. The liquid penetration length was defined as the distance between the nozzle tip and the most distant liquid fuel droplet along the spray axis. The cone angle ($\phi$) was calculated using equation [35], which was developed by Naber and Siebers and yielded reliable results. In this equation, $S$ is the liquid penetration length and $A$ is the "projected spray area of the upstream half of the spray in an image" [35].

$$\frac{\phi}{2} = tan^{-1}\left(\frac{A_{p,S/2}}{\frac{S}{2}^2}\right) \tag{3}$$

## 3.3 Engine Experiments

All experiments were performed with a Volvo D13 SCE whose key specifications are listed in Table 5 Crank angle resolved cylinder pressure traces were recorded in all engine experiments and used to determine a wide range of important combustion parameters by constructing apparent rate of heat release (aRoHR) curves. In combination with fuel consumption and emissions data, parameters such as the combustion phasing, ignition delay, combustion duration, gross indicated efficiency, and brake specific emissions could be calculated. These data could later be used to validate CFD and gas exchange models, enabling optimization of the cylinder head and piston bowl shapes as well as the positioning and targeting of the fuel sprays from the two injectors. The design of the cylinder head itself had been altered (relative to the stock configuration) before the experiments were conducted to accommodate two injectors: the main injector (Delphi) remained in the middle of the head, and the second (Bosch) injector was mounted alongside it, oriented in such a way that its spray was directed towards the middle of the cylinder. The injector arrangement and the adapted piston bowl shape are shown in Figure 5. The shape of the piston bowl was also altered to improve the ignition conditions for the methanol spray.

Table 3: Injector specifications

| **Injector** | **Name** | **Details** |
|---|---|---|
| Delphi | F2 (DFI21) | 6-holes, 2.3 l/min at 100 bar, 150° |
| Delphi | F3 (DFI5) | 8-hole, 4.65 l/min at 100 bar, 147° |
| Bosch | CRI2-18 | 3-hole, asymmetric |
| Delphi | F2 (DFI21) | single-hole, 0.34 mm orifice diameter |
| Delphi | F3 (DFI5) | single-hole, 0.32 mm orifice diameter |

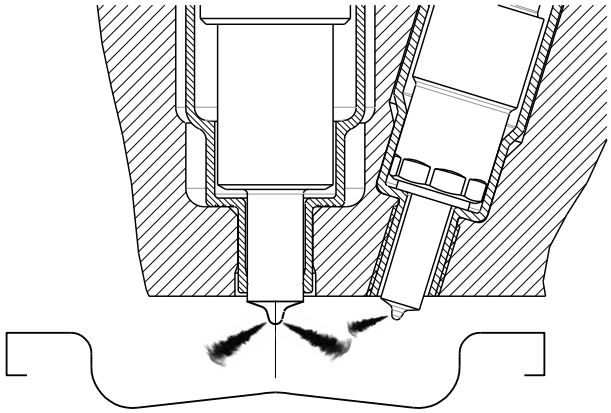

Figure 5: *Dual Injector arrangement [36]*

Five different speed-load points were studied to evaluate the combustion behavior of the methanol-Diesel dual fuel system, as shown in Table 4. Each of these points was related to the corresponding speed-load points for a Volvo D13 6 cylinder engine with 460 horsepower and a maximum torque of 2346 Nm by dividing the single-cylinder load by 6 and then applying an additional loss factor of around 4%. Three of the five speed-load points were of special interest because they are frequently approached during real driving processes. For instance, the 1400 rpm and 380 Nm point represents the upshift point encountered when accelerating, while the 1102 rpm and 380 Nm represents a downshift point. The 1262 rpm and 172 Nm point is of even greater interest because it corresponds roughly to the conditions at a truck's cruising speed, and thus the most common operating state of a heavy duty diesel engine.

Table 4: Speed-Load points

| **Point description** | **Speed [rpm]** | **Load [Nm]** |
|---|---|---|
| Low speed, low torque | 871 | 86 |
| medium speed, low torque | 1200 | 105 |
| medium speed, medium torque | 1262 | 172 |
| low speed, high torque (upshift point) | 1102 | 380 |
| high speed, high torque [downshift point) | 1400 | 380 |
| Rig stability check | 1400 | 307 |

Table 5: Volvo D13 HD single cylinder research engine specifications

| | **Value** | **Unit** |
|---|---|---|
| Displacement | 2.1295 | $dm^3$ |
| Bore | 131 | mm |
| Stroke | 158 | mm |
| Valves | 4 | |
| Compression ratio | 16.7:1 | |
| Inlet Valve Closing (IVC) | 138.5 | ° BTDC |
| Exhaust Valve Opening (EVO) | 130 | ° ATDC |
| maximum cylinder pressure | 200 | bar |
| maximum pressure rise rate | 20 | bar/CAD |
| Swirl number | 0 | |

### 3.3.1 Data acquisition and handling

Figure 6 depicts the experimental setup used in the test campaign. An AVL Puma Open system controlled the electric dynamometer (and hence the engine speed) and measured the engine's torque. The Puma system was connected to two AVL 733S/753C fuel conditioning systems that measured fuel consumption and also regulated the temperature and pressure of the fuel entering the high pressure pumps. A compressor provided pressurized intake air to the engine. A plenum at the intake and exhaust manifolds stabilized the air and exhaust gas flows and reduced pressure fluctuations into the engine and downstream towards the exhaust gas emission measurement equipment. The intake and exhaust pressure were also regulated by the Puma system via sets of valves located before the inlet of the plenum and after the exhaust plenum to guarantee constant inlet and outlet pressures.

An AVL AMA i60 R1C-EGR Exhaust Measurement system was used to perform sampling downstream of a valve in the exhaust stream (which functioned as a backpressure valve), through a heated pipe. On every test day, before and after the measurements at each new speed-load point, a rig rig stability check (RSC) was executed at the high speed-load point of 1400 rpm and 307 Nm. The mean measured emissions and their errors at this load point were calculated each time, giving an indication of the tests' reproducibility. The volume flow of intake air was calculated based on the $CO_2$ levels in the intake and exhaust. All data were recorded for 2 minutes by the Puma system and saved as averaged values over that time frame.

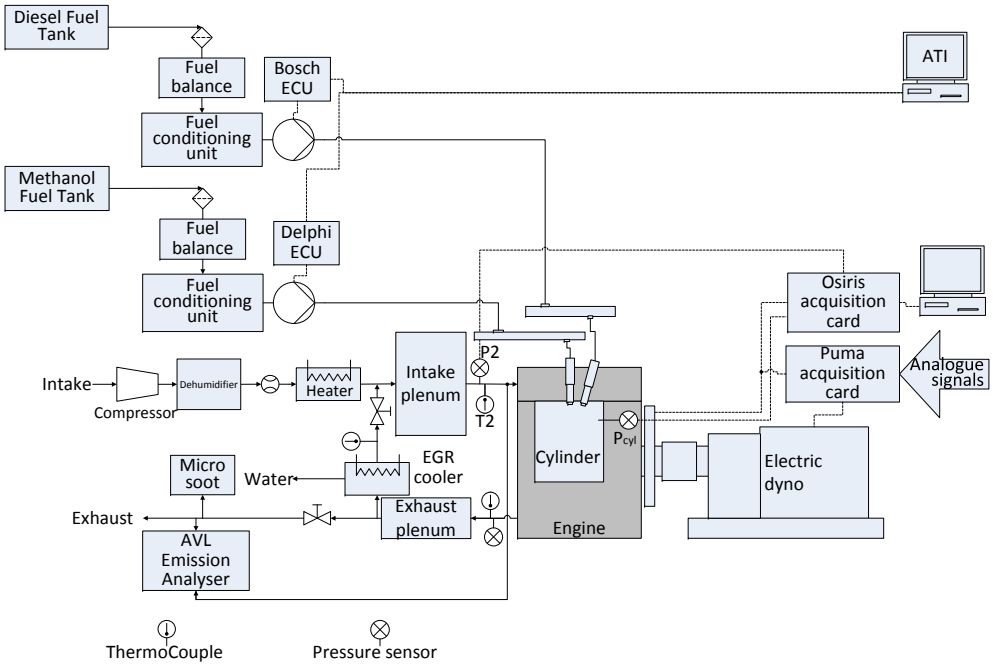


Figure 6: *Schematic of the Volvo D13 single cylinder dual fuel direct injection setup [36]*

The HD and MD fuel injection systems were controlled using ATI Vision from a separate computer. The injection pressure, timing, and duration were set directly based on the test point being investigated. The high pressure pumps were driven by external electrical motors at a constant speed. An Osiris fast data acquisition system was used for high frequency recording of the cylinder pressure and cylinder volume, the injector current pulses of both injectors, and the intake temperature and pressure before the intake valve. All of these variables were resolved in crank angle degrees (CAD) at a rate of 0.1 deg. The pressure was measured with an AVL Pressure Transducer QC34C with a measurement range of 0 to 250 bar. The position of the peak pressure during a motored case was recorded before every run and adjusted to 0.7 deg BTDC, which was determined to be the thermodynamic loss angle for the studied engine based on measurements performed by AB Volvo. One hundred complete 4-stroke engine cycles were recorded at each measurement point. Soot emissions were measured with an AVL 483 micro soot sensor.

### 3.3.2 Methods

The measured data were evaluated and post-processed with Matlab. An important variable for describing the quality of combustion is the gross indicated fuel efficiency, $\eta_{f,ig}$, which was calculated from the gross indicated work per cycle as described by Heywood [11], so only the compression and expansion stroke were included in the calculations. The pressure signal p was smoothed using the Savitsky-Golay filter with a window length of 9 and a polynomial fit of 4. Results were obtained for methanol-Diesel and Diesel alone in the dual fuel SCE.

The aRoHR was calculated to obtain the heat release for each fuel. No modeling of heat transfer to the combustion chamber walls (piston, cylinder head, and liner) was attempted, but the aRoHR calculations provided valuable information about differences between methanol-Diesel and pure Diesel with respect to variables such as combustion timing, the rate of combustion, and the combustion pattern for given levels of $\eta_{f,ig}$ when using similar injection strategies.

Design of experiments (DoE) was used to maximize the amount of information gained from the limited number of experiments that could be performed [37]. The design was performed using the MODDE Pro 11 software package from MKS Umetrics AB. The measurements were optimized using a Central Composite Face (CCF) design based on a full or fractional factorial design, with a full quadratic model including all two-factor interactions and all the square terms of all factors.

# 4 Contribution

## 4.1 Paper I

*"High Pressure Ethanol Injection under Diesel-like Conditions"*

The first paper describes studies on the evolution of ethanol fuel sprays over time. The sprays were characterized in terms of their liquid and vapor penetration lengths and the liquid spray cone angle, and were compared to Diesel fuel sprays generated under the same conditions. These experiments were performed at a gas density of 27 $kg/m^3$ at 550 °C and 60 bar, representing typical operating conditions for a HD engine at low loads. In addition to providing valuable data on alcohol spray properties, these studies served as a successful proof of concept showing that a Diesel common rail system can be used with an alcohol fuel at injection pressures up to 2200 bar. The injection pressure was confirmed to have only a minor effect on the liquid penetration length, and there was a strong correlation between the temperature and the liquid penetration length for ethanol sprays. Ethanol sprays were also shown to have shorter liquid lengths than diesel sprays under the same engine operating conditions. In an operating Diesel engine, this would mean a low risk of wall wetting when using injection strategies similar to those used in existing engines.

## 4.2 Paper II

*"Dual Fuel Methanol and Diesel Direct Injection HD Single Cylinder Engine Tests"*

The second paper included in this thesis can be seen as a continuation of the proof-of-concept under real engine conditions, this time using methanol. It was shown that a standard high pressure Diesel injection system can be employed without issue in an SCE using a methanol-Diesel dual injection combustion strategy. The combustion properties of the dual fuel system were compared to those of pure Diesel with the same dual injection strategy. The methanol-Diesel system exhibited stable and controllable combustion at the tested speed-load point. Moreover, the methanol system achieved similar fuel efficiency to conventional Diesel with lower NOx emissions and significantly lower soot emissions. However, it also yielded higher peak cylinder pressures and peak pressure rise rates. In addition, a DoE study showed that a good predictive regression model could be developed for the methanol-Diesel system based on a small number of experiments, greatly increasing the scope for interpreting the system's behavior.

# 5 Outlook

The overall objective of the project presented in this thesis is to develop a dual fuel direct injection engine utilizing a low cetane alcohol as the main fuel. The initial experimental campaigns using the HP/HT spray chamber and a single cylinder engine were successful, but more detailed investigations are needed.

A major concern at the start of the project was that it would be difficult to ignite the methanol during the engine tests. This concern proved to be unfounded. Moreover, the engine could be operated stably with methanol over the entire speed-load range of interest. The results presented in paper II show that this technology can deliver very low engine out soot emissions and acceptably low NOx emissions. However, some problems remain to be addressed. Notably, some components of the common rail system used to supply the methanol fuel in the studied engine should be replaced with more suitable alternatives. In particular, the high pressure release valve was unsuitable for the conditions required for optimal methanol combustion. In addition, the control system regulating the pressure was optimized for Diesel and should be adapted to accommodate alcohol fuels.

Although the results obtained to date with the methanol-Diesel dual fuel system are promising, many more experiments will be needed to fully evaluate its potential. To begin with, all of the engine experiments presented in this thesis were performed at a single speed-load point. Consequently, there is a need for additional experiments at other speed-load points to better characterize the effects of the methanol-Diesel dual injection strategy on key combustion parameters such as the combustion phasing, peak pressure rise rate, and combustion efficiency. In addition, it will be necessary to characterize the system's responses to variation in control parameters that influence combustion behavior and engine out emissions, such as exhaust gas recirculation, the nozzle hole configuration, the piston bowl shape, and the injection strategy. Finally, while all tests of the methanol-Diesel system conducted to date have been performed in a single-cylinder engine operating under stationary conditions, it will eventually be necessary to characterize the system's behavior during transient engine operation and in multi-cylinder engines.

The results presented herein suggest that the dual fuel strategy proposed in this project could at least partially replace fossil Diesel in HD applications. Importantly, the proposed system is largely compatible with existing Diesel engines, suggesting that it could be implemented as a retrofit solution for current vehicles and engines.

# References


[1] T. Nguyen, "The History of Transportation," 2017.

[2] European Commission, *EU Reference Scenario 2016: Energy, Transport and GHG emissions trends to 2050.* 2016.

[3] H. E. Institute, "Diesel Exhaust : A Critical Analysis of Emissions, Exposure, and Health Effects," pp. 1–294, 1995.

[4] IPCC, O. Edenhofer, R. Pichs-Madruga, Y. Sokona, E. Farahani, S. Kadner, K. Seyboth, A. Adler, I. Baum, S. Brunner, P. Eickemeier, B. Kriemann, J. Savolainen, S. Schlömer, C. von Stechow, T. Zwickel, and J. Minx (eds.), *Climate Change 2014: Mitigation of Climate Change. Contribution of Working Group III to the Fifth Assessment Report of the Intergovernmental Panel on Climate Change.* Cambridge University Press, Cambridge, United Kingdom and New York, NY, USA, 2014.

[5] EU Commission, "COMMISSION REGULATION (EU) No 582/2011 of 25 May 2011 - Heavy Duty," *Official Journal of the European Union*, vol. L 167, p. 1, 2011.

[6] Bundesgesetzblatt Jahrgang 2006 Teil 1, "Verordnung zum Erlass und zur Änderung von Vorschriften über die Kennzeichnung emissionsarmer Kraftfahrzeuge*)," 2006.

[7] European Commission, "A European Strategy for Low-Emission Mobility, SWD 244 final," p. 13, 2016.

[8] F. C. Menz and H. M. Seip, "Acid rain in Europe and the United States: An update," *Environmental Science and Policy*, vol. 7, no. 4, pp. 253–265, 2004.

[9] J. A. Mäder, J. Staehelin, T. Peter, D. Brunner, H. E. Rieder, and W. A. Stahel, "Evidence for the effectiveness of the Montreal Protocol to protect the ozone layer," *Atmospheric Chemistry and Physics*, vol. 10, no. 24, pp. 12161–12171, 2010.

[10] K. Akihama, Y. Takatori, K. Inagaki, S. Sasaki, and A. M. Dean, "Mechanism of the Smokeless Rich Diesel Combustion by Reducing Temperature," vol. 2001, no. 724, 2001.

[11] J. B. Heywood, *Internal Combustion Engine Fundementals*, vol. 21. 1988.

[12] J. Zeldovich, "The Oxidation of Nitrogen in Combustion and Explosions," *Acta Physicochimica URSS*, vol. 21, no. 4, p. 218, 1946.

[13] M. Alriksson, T. Rente, and I. Denbratt, "Low Soot , Low NOx in a Heavy Duty Diesel Engine Using High Levels of EGR," *SAE International*, no. 724, 2005.

[14] L. M. Pickett and D. L. Siebers, "Non-sooting, low flame temperature mixing controlled DI diesel combustion," *SAE transactions*, no. 724, 2004.

[15] C. Noehre, M. Andersson, B. Johansson, and A. Hultqvist, "Characterization of Partially Premixed Combustion," *SAE Technical Paper, 2006-01-3412*, no. 724, pp. 776–790, 2006.

[16] M. Tuner, "Review and Benchmarking of Alternative Fuels in Conventional and Advanced Engine Concepts with Emphasis on Efficiency, CO 2 , and Regulated Emissions," *SAE Technical Paper*, 2016.

[17] J. Strömberg, "Bioethanol in heavy duty transport," (Stellenbish, South Africa), 20th International Symposium on Alcohol Fuels (ISAF), 2013.

[18] I. M. Atadashi, M. K. Aroua, and A. A. Aziz, "High quality biodiesel and its diesel engine application: A review," *Renewable and Sustainable Energy Reviews*, vol. 14, no. 7, pp. 1999–2008, 2010.

[19] A. C. Hansen, Q. Zhang, and P. W. Lyne, "Ethanol-diesel fuel blends - A review," *Bioresource Technology*, vol. 96, no. 3, pp. 277–285, 2005.

[20] D. L. Siebers and C. Edwards, "Autoignition of Methanol and Ethanol Sprays under Diesel Engine Conditions," *SAE Technical Paper*, 1987.

[21] R. Vallinayagam, S. Vedharaj, W. M. Yang, W. L. Roberts, and R. W. Dibble, "Feasibility of using less viscous and lower cetane (LVLC) fuels in a diesel engine: A review," *Renewable and Sustainable Energy Reviews*, vol. 51, pp. 1166–1190, 2015.

[22] J. E. Dec, Y. Yang, and N. Dronniou, "Boosted HCCI - Controlling Pressure-Rise Rates for Performance Improvements using Partial Fuel Stratification with Conventional Gasoline," *SAE International Journal of Engines*, vol. 4, no. 1, pp. 2011–01–0897, 2011.

[23] R. D. Reitz and G. Duraisamy, "Review of high efficiency and clean reactivity controlled compression ignition (RCCI) combustion in internal combustion engines," *Progress in Energy and Combustion Science*, vol. 46, pp. 12–71, 2014.

[24] C. J. Mueller and M. P. Musculus, "Glow Plug Assisted Ignition and Combustion of Methanol in an Optical DI Diesel Engine," no. 724, 2001.

[25] J. A. Lorusso and H. A. Cikanek, "Direct Injection Ignition Assisted Alcohol Engine," *SAE Technical Paper*, 1988.

[26] T. M. Ullman, Terry L., Hare, Charles T., Baines, "Emissions from Direct-Injected Heavy-Duty Methanol-Fueled Engines (One Dual-Injection and One Spark-Ignited) and a Comparable Diesel Engine," *SAE International*, 1982.

[27] M. Wissink and R. Reitz, "Exploring the Role of Reactivity Gradients in Direct Dual Fuel Stratification," *SAE International Journal of Engines*, vol. 9, no. 2, pp. 2016–01–0774, 2016.

[28] M. Wissink and R. D. Reitz, "Direct Dual Fuel Stratification, a Path to Combine the Benefits of RCCI and PPC," *SAE International Journal of Engines*, vol. 8, no. 2, pp. 2015–01–0856, 2015.

[29] S. N. Soid and Z. A. Zainal, "Spray and combustion characterization for internal combustion engines using optical measuring techniques - A review," *Energy*, vol. 36, no. 2, pp. 724–741, 2011.

[30] D. L. Siebers, "Liquid-Phase Fuel Penetration in Diesel Sprays," no. 724, 1998.

[31] K. Browne, I. Partridge, and G. Greeves, "Fuel Property Effects on Fuel/Air Mixing in an Experimental Diesel Engine," *SAE Technical Paper*, 1986.

[32] D. L. Siebers, "Scaling liquid-phase fuel penetration in diesel sprays based on mixing-limited vaporization," *SAE technical paper*, no. 724, pp. 01–0528, 1999.

[33] M. Saccullo, M. Andersson, J. Eismark, and I. Denbratt, "High Pressure Ethanol Injection under Diesel-Like Conditions," *SAE Technical Paper 2017-01-0857*, 2017.

[34] C. Du, M. Andersson, and S. Andersson, "An analysis of image evaluation procedures for measurments of diesel spray characteristics," *ILASS – Europe 2014 conference paper*, 2014.

[35] J. Naber and D. L. Siebers, "Effects of Gas Density and Vaporization on Penetration and Dispersion of Diesel Sprays," no. 412, 1996.

[36] M. Saccullo, T. Benham, and I. Denbratt, "Dual Fuel Methanol and Diesel Direct Injection HD Single Cylinder Engine Tests," *SAE Technical Paper 2018-01-0259*, 2018.

[37] K. Röpke and C. Von Essen, "DoE in engine development," in *Quality and Reliability Engineering International*, vol. 24, pp. 643–651, 2008.